Refuse to Grant BC77977
Dated: 17 FEB 2020
kshan

BISHOP ARCHITECTURE
P O Box 908, ROTORUA
1109 Pukuatua Street, ROTORUA
(ph)07 929 9807
jobs@bishoparch.co.nz

BC ONLY
77977

Valley Detail 1
Scale: 1:10

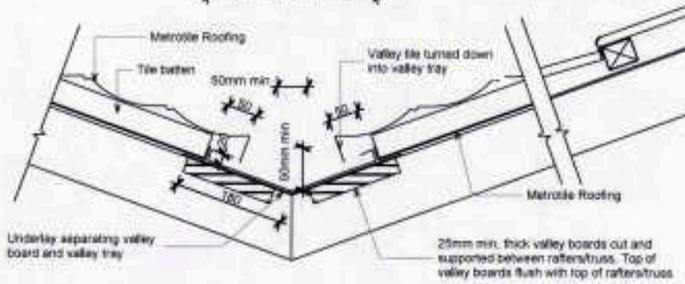

Ridge Detail 2
Scale: 1:10

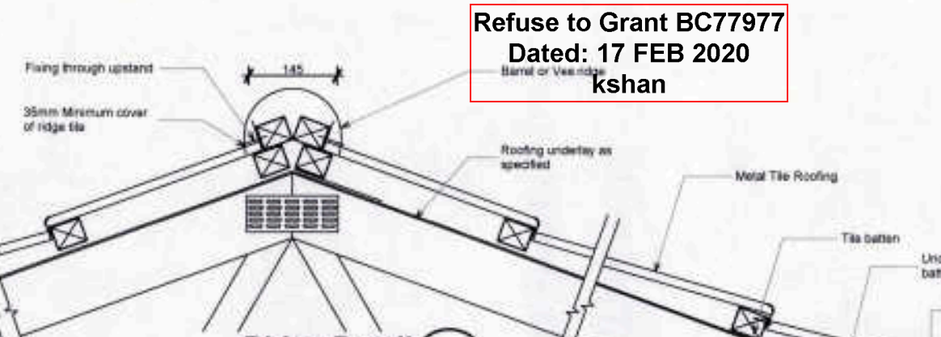

Eaves Detail 3
Scale: 1:10

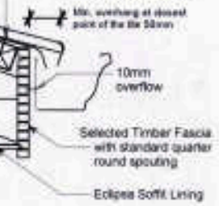

* Similar design detail for metal fascia systems

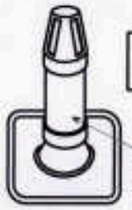

Pipe penetrations for as per E2/AS1 shall be flashed using EPDM or silicone rubber boot flashings

EDPM flexible boot sleeve and integral malleable soaker flashing dressed to roofing profile

Pipe penetrations

Barge Detail 4
Scale: 1:10

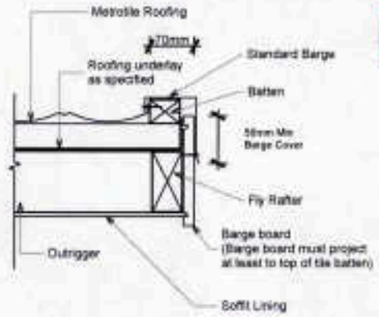

FIXING TOLERANCES

LUMBERLOK BLUE SCREW

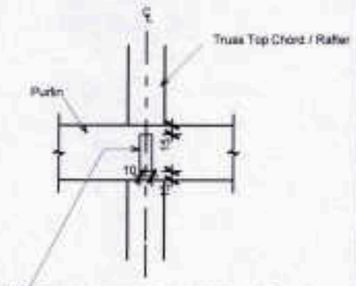

NOTE: Locate fixings within the shaded area. Care to be taken to avoid over tightening of screws.

PURLIN / BATTEN SPLICE FIXING OPTIONS

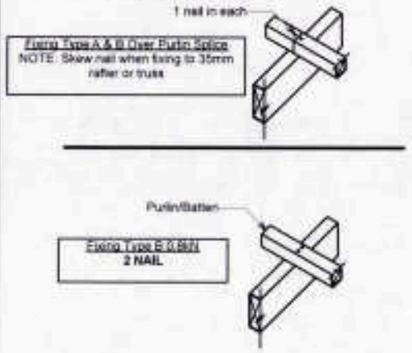

ROOF WEIGHT	MAX. PURLIN SPAN (mm)	MAX. PURLIN CRS. (mm)	WIND ZONE				
			L	M	H	VH	EH
HEAVY ROOF Tile Battens	900	370	A	A	A	A	A
LIGHT ROOF Tile Battens	900	370	A	A	B	C	C
	1200	370	A	B	C	C	C
LIGHT ROOF Purlins	900	900	C	C	C	C	D
	1200	900	C	C	C	D	D
	1200	1200	C	C	D	E	E

RRDX02G1OW
Document Number: RDC-992866
Date Registered: 25/2/2020

CONSENT

Client:
Mark Lam

Site Address:
16 Oakland Place, Ngongotaha, Rotorua,

LEGAL DESCRIPTION
Lot No. 70 389915

Job Title
Gourlay Home - Mark Lam

Drawing Title
Roofing Details

Scale	Drawing Number
1:10	17
Drawn JWD	
Checked MB	
Published 08-Jun-18	Job No. GH84

ALL DIMENSIONS TO BE VERIFIED ON SITE

Top Plate Connections

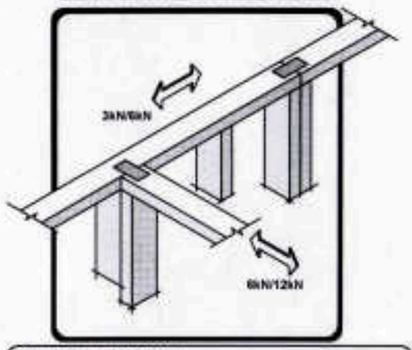

Top Plates at Right Angles	
Connection Capacity	LUMBERLOK Connector
6kN	Tylok 6T10 or 2x Strap Nails
12kN	2xSheet Brace Straps fixed with 6 x LUMBERLOK Product Nails 30mmx3.15 dia. per end per strap (24 nails total)

Top Plates in Line	
Connection Capacity	LUMBERLOK Connector
3kN	Tylok 6T5 Strap Nails
6kN	Tylok 6T10 or 2x Strap Nails

For single-storey buildings the connection in line of the top plate of a wall that contains one or more wall bracing elements shall be jointed according to the bracing capacity of the highest-rated individual wall bracing elements as follows:

(a) Bracing capacity not exceeding 100 bracing units: A 3 kN connection
(b) Bracing capacity exceeding 100 bracing units: A 6 kN connection
(c) Wall top plates to which ceiling diaphragms are attached: A 6 kN connection

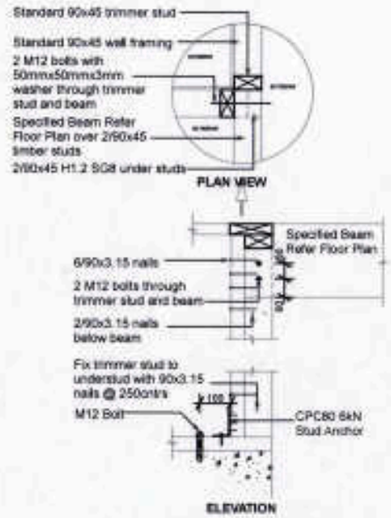

7 Beam Connections 1:20

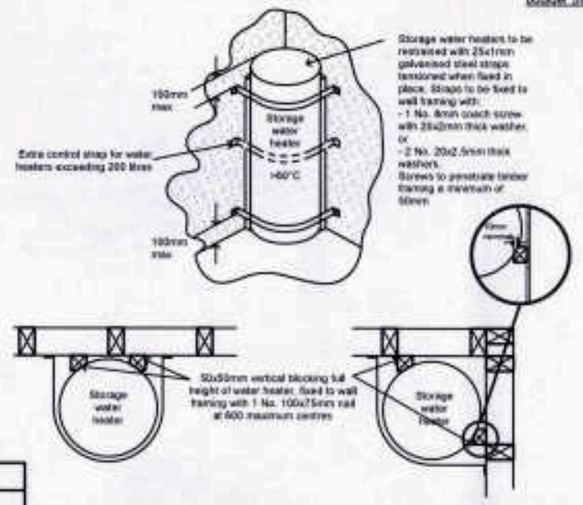

Refuse to Grant BC77977
Dated: 17 FEB 2020
lexhan

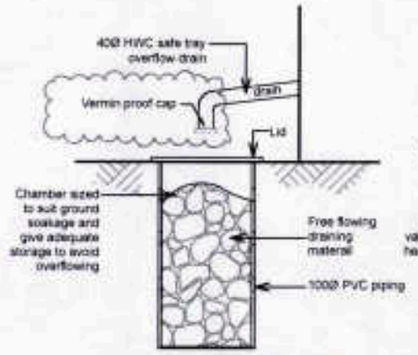

Standard small boulder Soak Pit

BISHOP ARCHITECTURE
P O Box 908, ROTORUA
1109 Pukuatua Street, ROTORUA
(ph)07 929 9807
jobs@bishoparch.co.nz

RECEIVED
20 JUL 2018

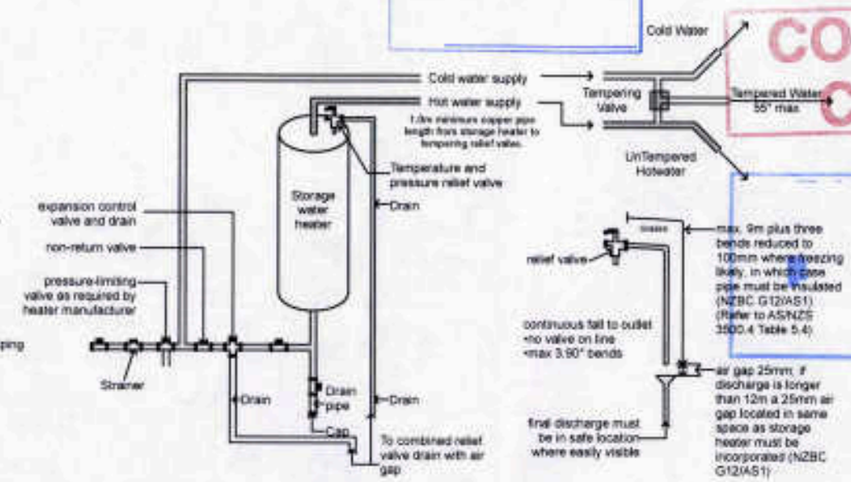

COUNCIL COPY
BC 77977

6.7.3 Combined relief valve drains

When relief valve drains are combined the combined drain shall (see Figure 13):
a) Receive discharges from one temperature/pressure relief valve or the pressure relief valve and one expansion control valve.
b) Discharge via a minimum air break of 25 mm, and
c) Have a minimum size of 20 mm diameter and be one size larger than the largest relief valve outlet.

6.7.5 relief drains located where freezing is likely

Additional requirements for relief drains located where freezing is likely (see Figure 12) are that:
a) Relief valve drain pipes shall discharge over a tundish with a 25 mm air break before the drain pipe enters a zone where freezing is likely, and
b) Relief valve drains from a tundish shall be one size larger than the outlet diameter of the relief valve

Pipework insulation

6.7.6 Closed cell foam polymer insulation or fibre glass insulation which is preformed to the shape of the pipe and not less than 13 mm thick, is acceptable material for preventing pipes less than or equal to 40 mm diameter from freezing. Any insulation material that absorbs moisture shall be protected in a waterproof membrane.the relief valve

Panel Hold-downs Details

GIB HandiBrac® – RECOMMENDED METHOD

Developed in conjunction with MiTek™ NZ, the GIB HandiBrac® has been designed and tested for use as a hold-down in GIB® BL and GSP bracing elements.
- The GIB HandiBrac® registered design provides for quick and easy installation.
- The GIB HandiBrac® provides a flush surface for the wall linings because it is fitted inside the framing. There is no need to check in the framing as recommended with conventional straps.
- The GIB HandiBrac® is suitable for both new and retrofit construction.
- The design also allows for installation and inspection at any stage prior to fitting internal linings.

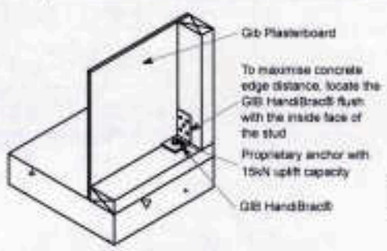

HandiBrac®
Concrete Floor - External Wall

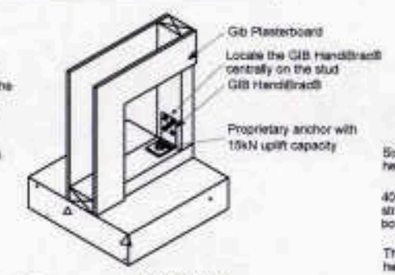

HandiBrac®
Concrete Floor - Internal Wall

Typical Bottom Plate Fixing

Proprietary anchors shall be within 150 mm of each end of the plate and be spaced at a maximum of 900 mm centres.
Refer NZS3604 7.5.12.2-4

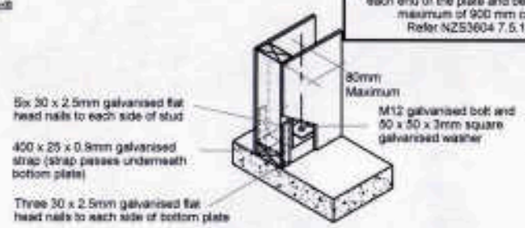

Concrete Floor
Internal / External Walls

CONSENT

Client:
Mark Lam

Site Address:
16 Oakland Place, Ngongotaha, Rotorua,

LEGAL DESCRIPTION
Lot No. 70 389915

Job Title
Gourlay Home - Mark Lam

Drawing Title
Fixing Details

Scale	Drawing Number
1:10, 1:20	18
Drawn: JWD	
Checked: MB	
Published: 19-Jul-18	Job No. GH84

ALL DIMENSIONS TO BE VERIFIED ON SITE

BISHOP ARCHITECTURE
P O Box 908, ROTORUA
1109 Pukuatua Street, ROTORUA
(ph)07 929 9907
jobs@bishoparch.co.nz

BC ONLY
77977

TYPE E (1.4 kN)

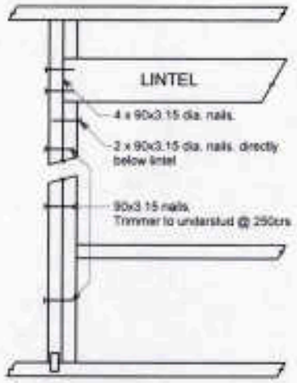

TYPE F (4.0 kN)

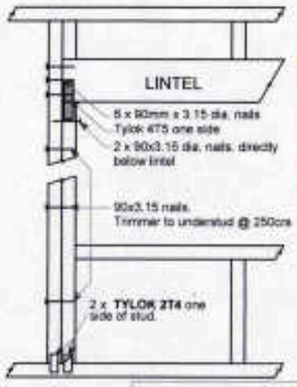

For fixing of jack studs to lintel & top plate Refer to Stud to top plate fixings

Lintel Supporting Girder Trusses: [redacted]

Roof Tributary Area	Light Roof Wind Zone L, M, H	Light Roof Wind Zone VH	Light Roof Wind Zone EH	Heavy Roof Wind Zone L, M, H	Heavy Roof Wind Zone VH	Heavy Roof Wind Zone EH
8.6 m²	G	G	H	G	G	H
11.6 m²	G	H	H	G	G	H
12.1 m²	G	H	H	G	H	H
15.3 m²	H	H	-	G	H	H
19.1 m²	H			G	H	
20.8 m²	H			H	H	
21.8 m²	H			H		
34.3 m²	-	-	-	H	-	-

SELECTION CHART FOR LINTEL FIXING

Lintel Span	Loaded Dimension	Light Roof Wind Zone L	M	H	VH	EH	Heavy Roof Wind Zone L	M	H	VH	EH
0.7	2.0	E	E	E	E	E	E	E	E	E	E
	3.0	E	E	E	E	F	E	E	E	E	F
	4.0	E	E	F	F	F	E	E	E	F	F
	5.0	E	F	F	F	G	E	E	F	F	F
	6.0	E	F	F	G	G	E	E	F	F	G
0.9	2.0	E	E	E	F	F	E	E	E	E	F
	3.0	E	E	F	F	F	E	E	F	F	F
	4.0	E	E	F	F	F	E	E	F	F	F
	5.0	E	F	F	F	G	E	E	F	F	F
	6.0	E	F	F	G	G	E	E	F	F	G
1.0	2.0	E	E	E	F	F	E	E	E	E	F
	3.0	E	E	F	F	F	E	E	E	F	F
	4.0	E	F	F	F	G	E	E	F	F	F
	5.0	E	F	F	G	G	E	E	F	F	G
	6.0	E	F	F	G	G	E	E	F	F	G
1.2	2.0	E	E	E	F	F	E	E	E	F	F
	3.0	E	E	F	F	F	E	E	F	F	F
	4.0	E	F	F	G	G	E	E	F	F	G
	5.0	E	F	F	G	G	E	E	F	F	G
	6.0	F	F	G	G	H	E	E	F	G	G
1.5	2.0	E	E	F	F	F	E	E	E	F	F
	3.0	E	F	F	F	G	E	E	F	F	F
	4.0	E	F	F	G	G	E	E	F	F	G
	5.0	F	F	G	G	H	E	E	F	G	G
	6.0	F	F	G	H	H	E	E	F	G	H
2.0	2.0	E	F	F	F	G	E	E	F	F	F
	3.0	E	F	F	G	G	E	E	F	F	G
	4.0	F	F	G	G	H	E	E	F	G	G
	5.0	F	G	G	H	H	E	E	F	G	H
	6.0	F	G	H	H	H	E	F	G	H	H
2.4	2.0	E	F	F	G	G	E	E	F	F	G
	3.0	F	F	G	G	H	E	E	F	G	G
	4.0	F	F	G	H	H	E	E	F	G	H
	5.0	F	G	G	H	H	E	F	G	H	H
	6.0	F	G	H	H	-	E	F	G	H	H
3.0	2.0	E	F	F	G	G	E	E	F	F	G
	3.0	F	F	G	H	H	E	E	F	G	H
	4.0	F	G	G	H	H	E	F	G	H	H
	5.0	F	G	H	H	-	E	F	G	H	H
	6.0	F	G	H	-	-	E	F	G	H	-
3.6	2.0	F	F	G	G	H	E	E	F	G	G
	3.0	F	F	G	H	H	E	F	G	G	H
	4.0	F	G	H	H	-	E	F	G	H	H
	5.0	F	G	H	-	-	E	F	G	H	-
	6.0	G	H	H	-	-	E	F	H	-	-
4.2	2.0	F	F	G	G	H	E	E	F	G	G
	3.0	F	G	H	H	-	E	F	G	H	H
	4.0	F	G	H	-	-	E	F	G	H	-
	5.0	G	H	H	-	-	E	F	H	-	-
	6.0	G	H	-	-	-	E	F	H	-	-
4.5	2.0	F	F	G	H	H	E	E	F	G	H
	3.0	F	G	H	H	-	E	F	G	H	H
	3.4	F	G	H	H	-	E	F	G	H	-
	4.0	F	G	H	-	-	E	F	G	H	-
	5.0	G	H	-	-	-	E	F	H	-	-
	6.0	G	H	-	-	-	E	F	H	-	-
4.8	2.0	F	F	G	H	H	E	E	F	G	H
	3.0	F	G	H	H	-	E	F	G	H	H
	3.2	F	G	H	H	-	E	F	G	H	-
	4.0	F	G	H	-	-	E	F	H	-	-
	5.0	G	H	-	-	-	E	F	H	-	-
	6.0	G	H	-	-	-	E	F	H	-	-

FIXING SELECTION CHART

(Suitable for walls supporting roof members at 600, 900 or 1200mm crs.)

Wind Zones L, M, H, VH, EH, as per NZS 3604:2011

Loaded Dimension (m) Stud Centres 300mm	450mm	600mm	Light Roof Wind Zone L	M	H	VH	EH	Heavy Roof Wind Zone L	M	H	VH	EH
3.0	2.3	1.5	A	A	B	B	B	A	A	B	B	B
4.0	3.0	2.0	A	A	B	B	B	A	A	B	B	B
5.0	3.8	2.5	A	B	B	B	B	A	A	B	B	B
6.0	4.5	3.0	A	B	B	B	B	A	A	B	B	B
7.0	5.3	3.5	A	B	B	B	B	A	A	B	B	B
8.0	6.0	4.0	A	B	B	B	B	A	A	B	B	B
9.0	6.8	4.5	B	B	B	B	B	A	A	B	B	B
10.0	7.5	5.0	B	B	B	B	B	A	A	B	B	B
11.0	8.3	5.5	B	B	B	B	B	A	A	B	B	B
12.0	9.0	6.0	B	B	B	B	B	A	A	B	B	B

FIXING TYPE A 0.7 kN

2 x 90mm x 3.15 dia. plain steel wire nails driven vertically into stud

Sill and Head trimmers

Maximum clear width of opening (m)	Minimum thickness of sill and header trimmers (mm)
2.0	36
2.4	45
3.0	90 (or 2/45 mm)
3.6	135 (or 3/45 mm)
4.2	SED

All wind zones - NZS 3604 table 8.15

FIXING TYPE B 4.7 kN CHOOSE ANY OF THE 3 OPTIONS BELOW

2 x 90mm x 3.15 dia. plain steel wire nails driven vertically into stud

Plus LUMBERLOK 6kN Stud Anchor (CPC80)

2 x 90mm x 3.15 dia. plain steel wire nails driven vertically into stud

Plus 2 x LUMBERLOK CPC40

Recommended for internal wall options to avoid lining issues

2 x 90mm x 3.15 dia. plain steel wire nails driven vertically into stud

Plus LUMBERLOK Stud Strap (one face only)

Terminal vent through top plate

For Terminal vents exceeding 60mm the the top plate needs to be strengthened using one of the following methods

(a) A 70 mm x 45 mm member x 600 mm long nailed to the exterior side of the plate with 4/75 x 3.15 nails on each side of the hole or notch;
(b) A 70 mm x 45 mm eaves runner connected to all studs and no more than 250 mm below the top plate; or
(c) A 70 x 45 mm blocking fitted between ceiling joists or trusses above cut top plates and the steel angle

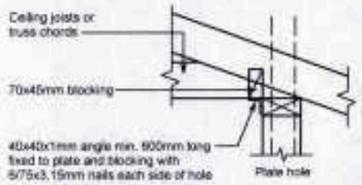

TYPE G (7.5 kN)

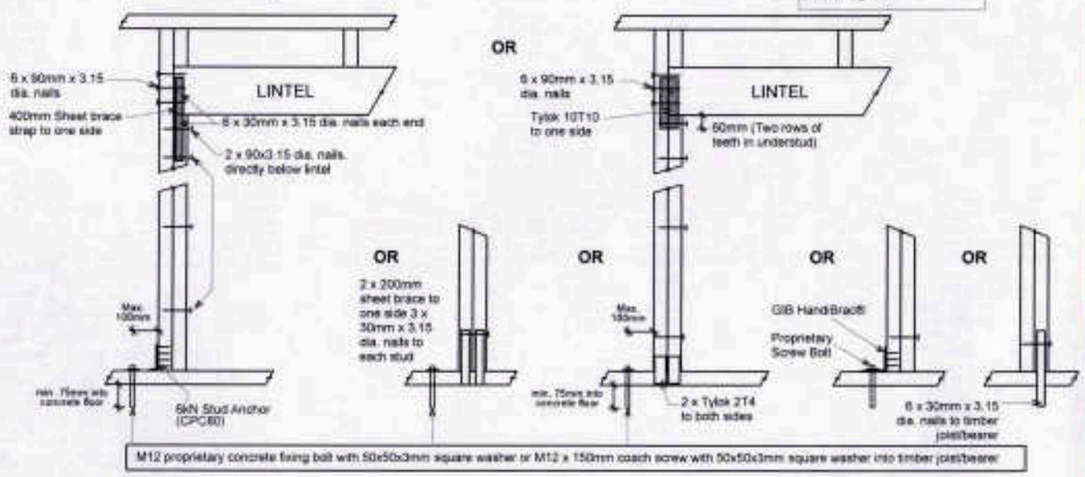

For fixing of jack studs to lintel & top plate Refer to Stud to top plate fixings

TYPE H (13.5 kN)

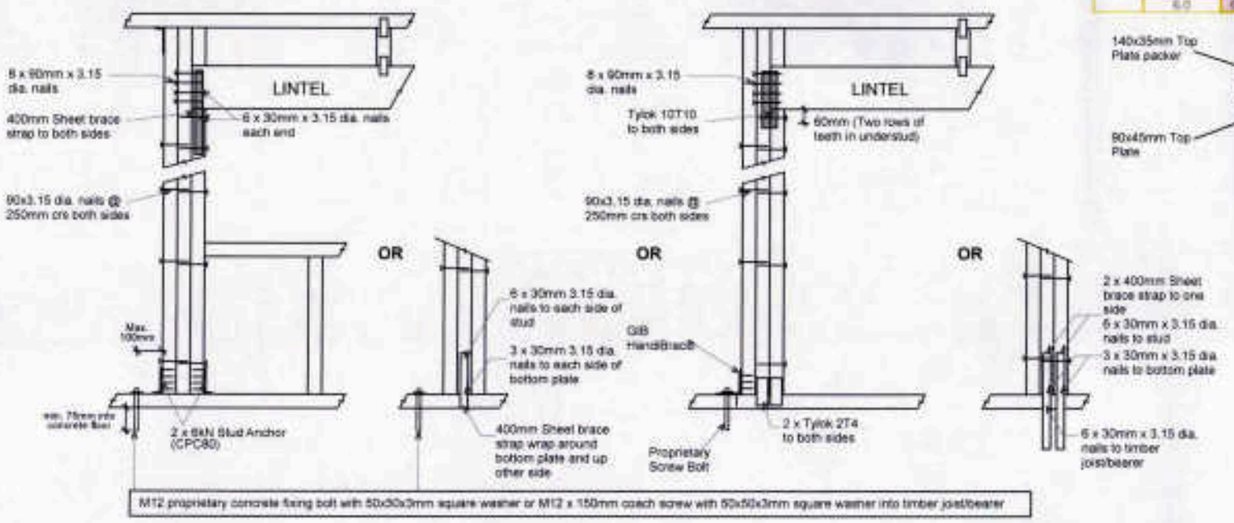

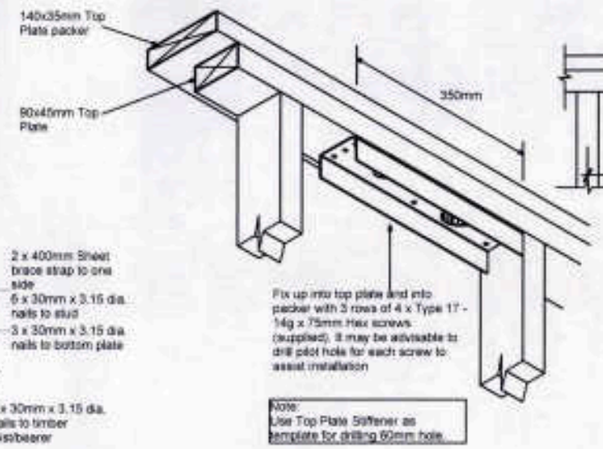

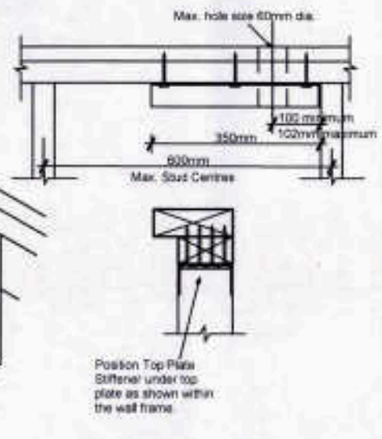

CONSENT

Client:
Mark Lam

Site Address:
16 Oakland Place, Ngongotaha, Rotorua,

LEGAL DESCRIPTION
Lot No. 70 389915

Job Title
Gourlay Home - Mark Lam

Drawing Title
Fixings Details

Scale	Drawing Number
1:NTS10	19
Drawn JWD	
Checked MB	
Published 08-Jun-18	Job No. GH84

ALL DIMENSIONS TO BE VERIFIED ON SITE

Document Set ID: 3556054
Version: 2, Version Date: 25/02/2020

BISHOP ARCHITECTURE
P O Box 906, ROTORUA
1109 Pukuatua Street, ROTORUA
(ph)07 929-9807
jobs@bishoparch.co.nz

BC ONLY
77977

Fasteners
Fasten with 50 x 2.8 mm galvanised or stainless steel flat head nails for direct fix, or 60 x 2.8 mm over cavity battens. Place fasteners no less than 7 mm from sheet edges.
Fasteners for H3.2 CCA treated Ecoply
Where fasteners are in contact with H3.2 CCA treated timber or plywood, fasteners shall be a minimum of hot dip galvanised.
In certain circumstances stainless steel fasteners may be required. Refer to table 8 of the Ecoply Specification and Installation Guide for these circumstances and further fastener selection advice.
Stainless steel fasteners must be annular grooved.

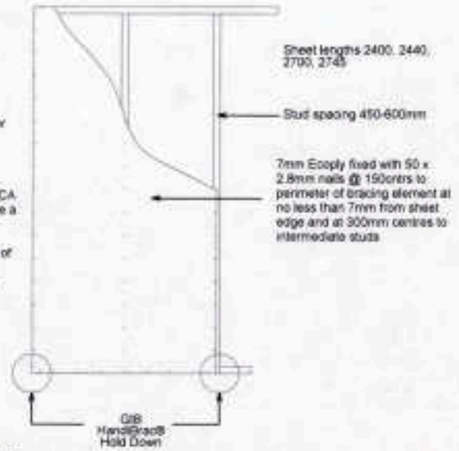

Lining - EPG/GSP
Side 1: One layer of 7mm Ecoply plywood, Ecoply Barrier or Shadowclad exterior wall cladding fixed directly to framing or over cavity battens. If part sheets are used, ensure nailing at required centres is carried out around the perimeter of each sheet or part sheet. A 2-3mm expansion gap should be left between sheets.
Side 2: One layer of 10 or 13mm GIB® Standard plasterboard vertically or horizontally fixed. Sheet joints are touch fitted and fastener heads and joints stopped in accordance with the GIB® Site Guide

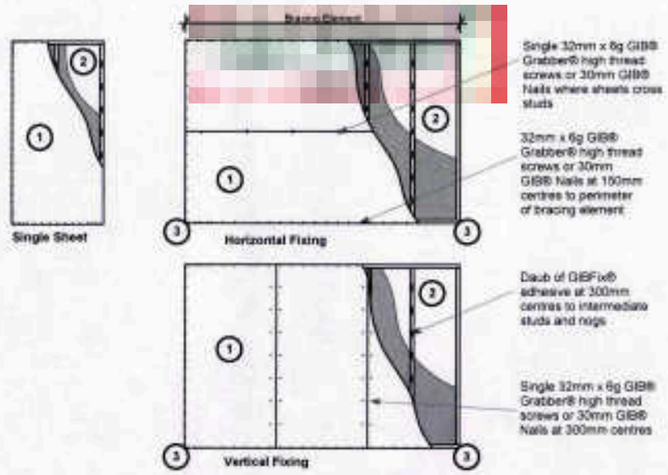

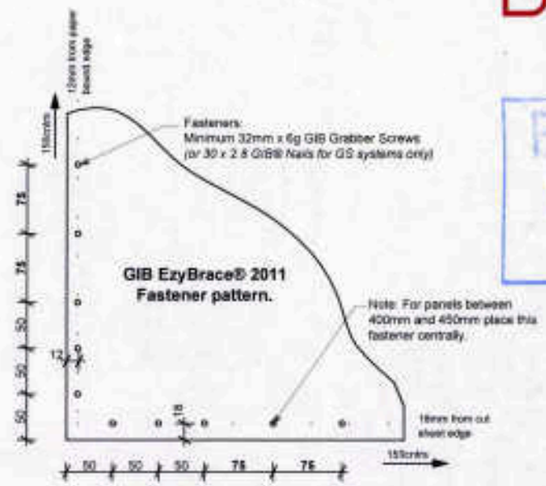

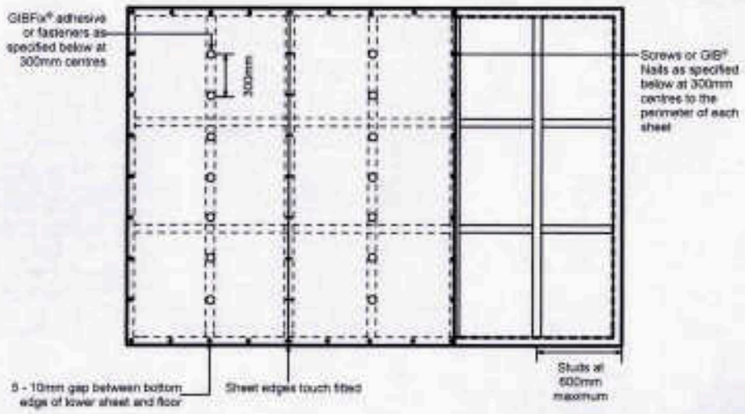

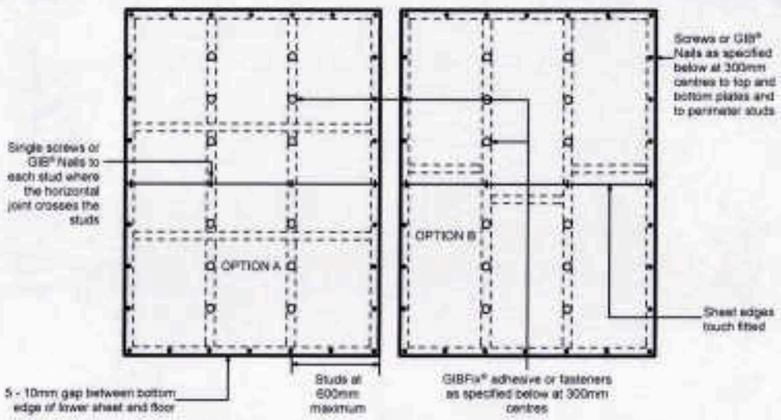

Construction Details (3)

Brace type	Lining one side (1) Lining	Fasteners	Lining opposite side (2) Lining	Fasteners	Panel Hold-Down Fixings	Fasteners Spacing's
GS1-N	Any 10mm or 13mm GIB® Plasterboard	30mm GIB® nails, or minimum 32mm x 6g GIB® Grabber® high thread screws	Not required	Not required	Not required	*GIB® Plasterboard* Corner fastening pattern as illustrated above Fasteners at 150mm to bracing element perimeter, and: • at 300mm centres to intermediate sheet joints for vertical fixing, or • at stud / sheet junction for horizontally fixed elements, and • GIBFix adhesive daubs at 300mm crs to intermediate framing *Plywood* Fasteners at 150mm around the perimeter of every sheet and at 300mm centres to intermediate studs. Place fasteners no closer than 7mm from sheet edges. Plasterboard corner fastener pattern does not apply to plywood.
GS2-N			Any 10mm or 13mm GIB® Plasterboard	30mm GIB® nails, or minimum 32mm x 6g GIB® Grabber® high thread screws		
GSP-H			Minimum 7mm Ecoply manufactured to AS/NZS 2269	50mm x 2.8mm Flat head galvanised or stainless steel nails	Yes, see detail	
BL1 - H BLG - H	Any 10mm or 13mm GIB® Braceline	minimum 32mm x 6g GIB® Grabber® high thread screws GIB Braceline® Nails may be used for 10mm GIB Braceline® ONLY	Not required	Not required		
			Any 10mm or 13mm GIB® Plasterboard	30mm GIB® nails, or minimum 32mm x 6g GIB® Grabber® high thread screws		
BLP - H			Minimum 7mm Ecoply manufactured to AS/NZS 2269	50mm x 2.8mm Flat head galvanised or stainless steel nails		
EP1	7mm Ecoply®, or Ecoply Barrier one side	7mm Ecoply®, fixed with 50x2.8mm nails @ 150mm centres to perimeter of bracing element at no less than 7mm from sheet edge and at 300mm centres to intermediate studs	Not required	Not required	Yes, see detail	

Bottom plate fixings for GIB Bracing Elements

Brace type	Concrete slabs: External wall	Concrete slabs: Internal wall	Timber floors: External and internal walls
GS1-N	As per NZS 3604:2011 No specific additional fastening required	As per NZS 3604:2011. Alternatively use 75x3.8mm shot-fired fasteners with 16mm washers, 150mm and 300mm from each end of the bracing element and at 600mm thereafter	Pairs of 100x3.75mm flat head hand driven nails or 3/90x3/15mm power driven nails at 600mm centres in accordance with NZS 3604:2011
GS2-N	Not applicable		
GSP-H BL1-H BLP-H	Intermediate fastenings to comply with NZS 3604:2011 In addition: GIB Handibrac fixings or metal wrap around strap fixings and bolt as illustrated on pages 19 and 20.		Pairs of 100x3.75mm flat head hand driven nails or 3/90x3/15mm power driven nails at 600mm centres in accordance with NZS 3604:2011 In addition: GIB Handibrac fixings or metal wrap-around strap fixings and bolt as illustrated.
BLG-H	Not applicable	As for GSP-N, BL1-H, BLP-H on create slab above	

NOTES:
Gib Aqualine Wet System
Refer GIB Aqualine Wet Area Systems 2007 installation guide for all wet area details

PLASTERBOARD LININGS - All linings to Gib living solutions Site Guide (December 2014) and all relevant suppliers documentation. Bracing elements as detailed on plans.
Wet areas to be lined with Gib Aqualine as outlined in Gib Aqualine Wet Area Systems (March 2007)

3. ACCEPTABLE

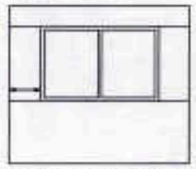

This moves the joint away from problem area. Floating joint, correctly taped and stopped is less likely to crack.

4. ACCEPTABLE
Recommended min. 200mm

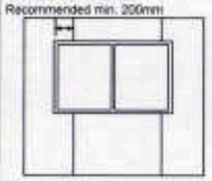

Positioning the joint 200mm from the window edge will reduce the likelyhood of cracking.

5. RECOMMENDED

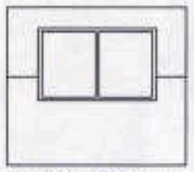

If the grooved jambs have been accurately installed, this is not difficult for a competent fixer. The lining on this wall will need to be fixed prior to any adjacent walls.

CONSENT

Client:
Mark Lam
Site Address:
16 Oakland Place, Ngongotaha, Rotorua,
LEGAL DESCRIPTION
Lot No. 70 389915

Job Title
Gourlay Home - Mark Lam

Drawing Title
Linings Details

Scale	Drawing Number
NTS	20
Drawn JWD	
Checked MB	
Published 08-Jun-18	Job No. GH84

ALL DIMENSIONS TO BE VERIFIED ON SITE

Document Set ID: 3556054
Version: 2, Version Date: 25/02/2020

BISHOP ARCHITECTURE
P O Box 908, ROTORUA
1109 Pukuatua Street, ROTORUA
(ph)07 929 9807
jobs@bishoparch.co.nz

BC ONLY
77977

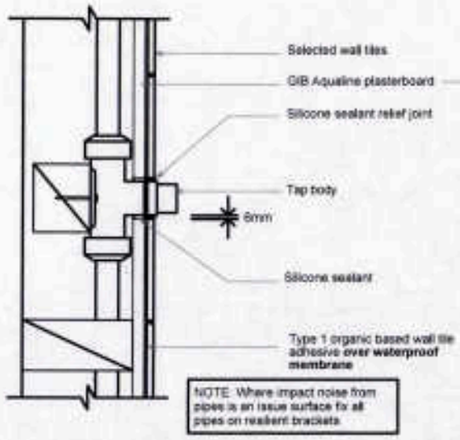

TYPICAL PLUMBING PENETRATION

SCALE 1:5

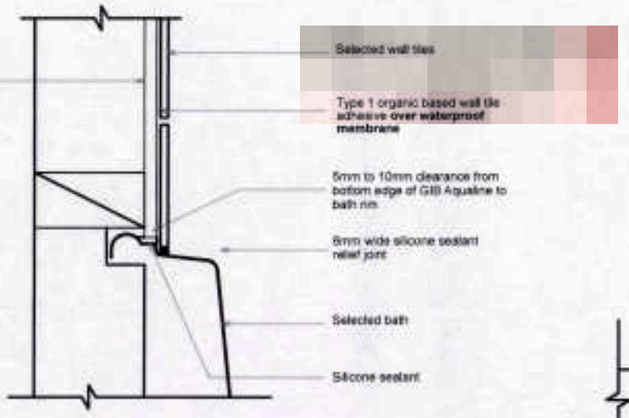

BATH WALL JUNCTION

SCALE 1:5

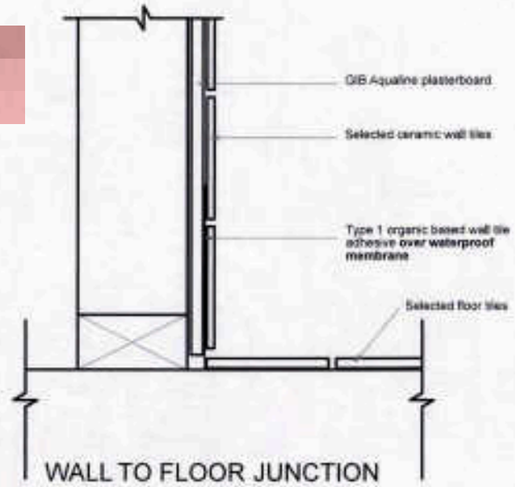

WALL TO FLOOR JUNCTION

SCALE 1:5

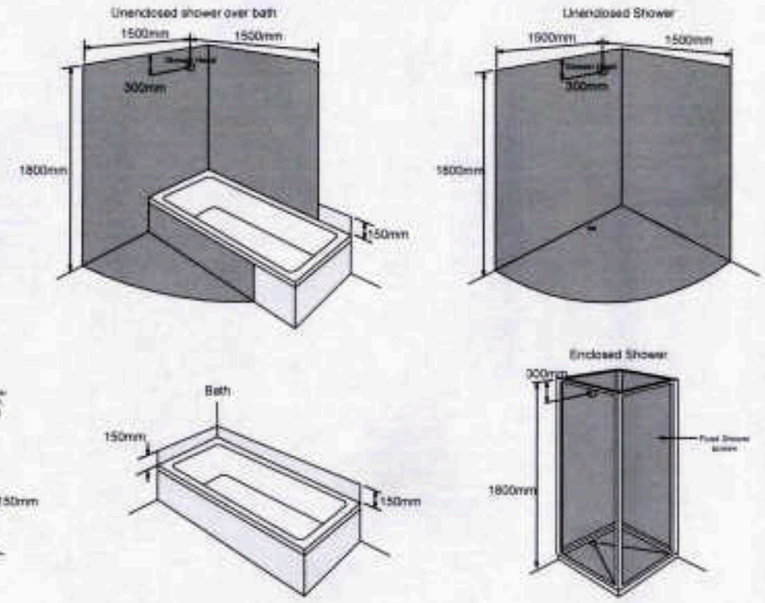

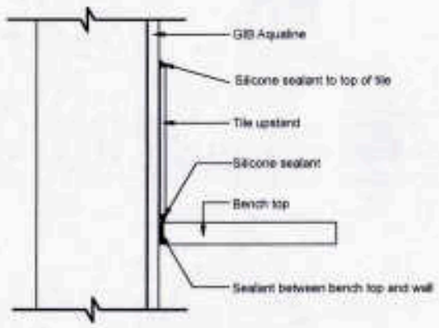

WALL TO BENCH JUNCTION

SCALE 1:5

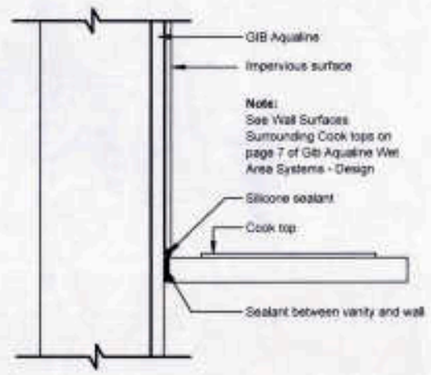

WALL TO BENCH JUNCTION

SCALE 1:5

NOTES

Gib Aqualine Wet System

Refer GIB Aqualine Wet Area Systems March 2007 installation guide for all wet area details

PLASTERBOARD LININGS - All linings to Gib living solutions Site Guide (December 2014) and all relevant suppliers documentation. Bracing elements as detailed on plans.
Wet areas to be lined with Gib Aqualine as outlined in Gib Aqualine Wet Area Systems (March 2007)

PAINTING - Wet Areas - Water-based acrylic enamel paint applied over a solvent-based sealer coat

Resene System as detailed or similar
BASE: Replace Resene Broadwall Waterborne Wallboard Sealer (D403) with either Resene Sureseal (D42) or Resene Waterborne Smooth Surface Sealer (D47a).
WALLS: Resene SpaceCote Low Sheen Kitchen & Bathroom (D311K) or Resene SpaceCote Low Sheen (D311).
CEILINGS: Resene SpaceCote Flat Kitchen & Bathroom (D314K) or Resene SpaceCote Flat (D314).

Surfaces in Showers and Around Baths

A waterproof membrane complying with AS/NZS 4858: 2004 MUST be applied to all lining materials used under ceramic tiles in these areas. The waterproof membrane must extend to a 1500mm horizontal radius from a shower rose unless the shower is contained within a fixed enclosure.
Particleboard manufacturers recommend that in wet areas, panels should be protected with a suitable wet area membrane or an integrally waterproof sheet material. Some local authorities call for this treatment on all timber based floors. Local requirements should be checked before proceeding.

Dark grey shaded areas in the diagrams below represent the minimum extent of wall surfaces requiring impervious sheet materials or waterproof membranes prior to tiling. Light grey shaded areas represent good practice.

SHOWER MIXER

Run a bead of silicone sealant around the mixer unit onto the tiles extending below the bottom of the pipe aperture

SURFACE FINISHINGS

E3.3.4 requires impervious and easily cleaned surfaces to all surfaces adjacent to sanitary fixtures or laundering facilities.
E3.3.5 requires that surfaces of building elements likely to be splashed or contaminated in the course of the intended use of the building, must also be impervious and easily cleaned.
E3.3.6 requires that surfaces of building elements likely to be splashed must be constructed in a way that prevents water from penetrating behind linings or into concealed spaces (e.g. wall cavities).
Walls in wet areas therefore need to be addressed according to whether they fall within the scope of one of the following descriptions:
1. Wall surface likely to be splashed
2. Shower walls. Although not a requirement of NZBC it is highly recommended that the wall surfaces within 150mm of the top edge of a bath, and the vertical faces immediately under the edge of a bath, are treated in the same way as for a shower wall
D3/AS1 Slip Resistance
Slip resistance in wet areas to meet NZBC D1 Table 2 with a slip resistance coefficient of 0.4 maximum when wet.

CONSENT

Client:
Mark Lam

Site Address:
16 Oakland Place, Ngongotaha, Rotorua,

LEGAL DESCRIPTION
Lot No: **70** **389915**

Job Title
Gourlay Home - Mark Lam

Drawing Title
Wet Area Details

Scale 1:1	Drawing Number 21
Drawn JWD	
Checked MB	
Published 08-Jun-18	Job No. GH84

ALL DIMENSIONS TO BE VERIFIED ON SITE

Document Set ID: 3556054
Version: 2, Version Date: 25/02/2020

BISHOP ARCHITECTURE
P O Box 908, ROTORUA
1109 Pukuatua Street, ROTORUA
(ph)07 929 9807
jobs@bishoparch.co.nz

BC ONLY
77977

NOTES

Gib Aqualine Wet System

Refer GIB Aqualine Wet Area Systems March 2007 installation guide for all wet area details

PLASTERBOARD LININGS - All linings to Gib Site Guide (Jan 2010) and all relevant suppliers documentation. Bracing elements as detailed on plans.
Wet areas to be lined with Gib Aqualine as outlined in Gib Aqualine Wet Area Systems (Mar 2007)

TILING

Tiles to be installed in accordance with requirements outlined in AS3958 (installation of ceramic tiles)
Adhesive to be organic based complying with AS2358 or as specified by tile manufacturer

SHOWER MIXER

Run a bead of silicone sealant around the mixer unit onto the tiles extending below the bottom of the pipe aperture

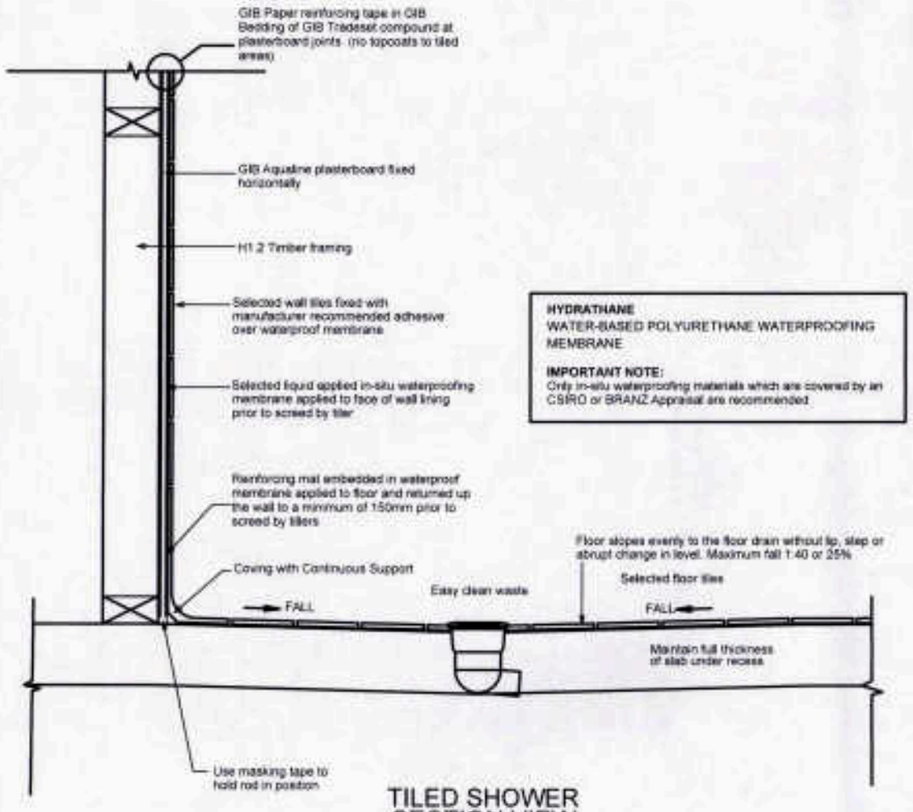

TILED SHOWER
SECTION VIEW

SCALE 1:10

HYDRATHANE
WATER-BASED POLYURETHANE WATERPROOFING MEMBRANE

IMPORTANT NOTE:
Only in-situ waterproofing materials which are covered by an CSIRO or BRANZ Appraisal are recommended

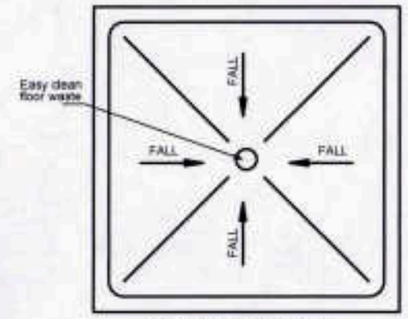

TILED SHOWER

SCALE 1:20

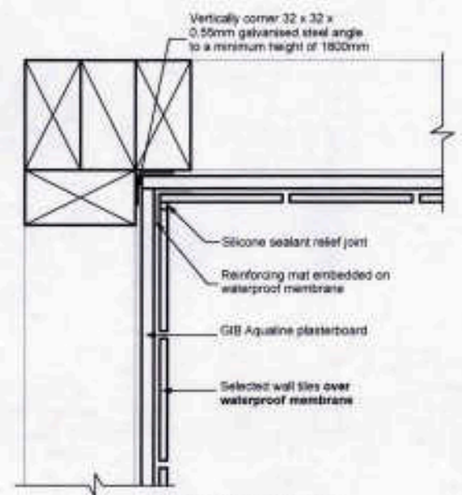

TILED SHOWER
INTERNAL CORNER DETAIL
PLAN VIEW

SCALE 1:5

CONSENT

Client
Mark Lam

Site Address
16 Oakland Place, Ngongotaha, Rotorua,

LEGAL DESCRIPTION
Lot No. **70** **389915**

Job Title
Gourlay Home - Mark Lam

Drawing Title
Tiled shower Details

Scale **1:1**	Drawing Number **22**
Drawn JWD	
Checked MB	
Published 08-Jun-18	Job No. GH84

ALL DIMENSIONS TO BE VERIFIED ON SITE

Document Set ID: 3556054
Version: 2, Version Date: 25/02/2020

GIB EzyBrace® Bracing Software

Demand Calculation Sheet

Job Details

Name:	Gourlay Homes
Street and Number:	16 Oakland Place
Lot and DP Number:	68 DP 389915
City/Town/District:	Rotorua
Designer:	MB
Company:	Bishop Architecture
Date:	Friday, April 6, 2018

Building Specification

Number of Storeys	1
Floor Loading	2 kPa
Foundation Type	Slab
	Single
Cladding Weight	Heavy
Roof Weight	Light
Room in Roof Space	No
Roof Pitch (degrees)	25
Roof Height above Eaves (m)	2.9
Building Height to Apex (m)	5.3
Ground to Lower Floor (m)	0.2
Average Stud Height (m)	2.4
Building Length (m)	21.66
Building Width (m)	12.610
Building Plan Area (m²)	223

Building Location

Wind Zone = High

Earthquake Zone 2

Soil Type	D & E (Deep to Very Soft)
Annual Prob. of Exceedance:	1 in 500 (NZS3604:2011 Default)

Bracing Units required for Wind

	Along	Across
Single Level	718	1345

Bracing Units required for Earthquake

	Along & Across
Single Level	1355

GIB Ezybrace® Version 8/16

ALONG

Bracing Line			Bracing Elements Provided					Wind		Earthquake	
Line Label	Min BUs W	Min BUs E	Brace No.	Brace Type	Brace Length	Brace Angle	Brace Height	Rating BUs/m	BUs Achieved	Rating BUs/m	BUs Achieved
A	105	108	A1	GSP-H	1.0	0.0	2.4	100	100.0	115	115.0
			A2	GS1-N	1.2	0.0	2.4	70	84.0	60	72.0
B	192	192	B1	GSP-H	1.0	0.0	2.4	100	100.0	115	115.0
			B2	GS1-N	0.5	0.0	2.4	50	25.0	55	27.5
			B3	GSP-H	0.6	0.0	2.4	100	60.0	115	69.0
			B4	GS1-N	0.6	0.0	2.4	50	30.0	55	33.0
			B5	GS1-N	0.4	0.0	2.4	50	20.0	55	22.0
C	100	108	C1	GS1-N	2.6	0.0	2.4	70	182.0	60	156.0
			C2	GS1-N	2.6	0.0	2.4	70	182.0	60	156.0
			C3	GS1-N	2.6	0.0	2.4	70	182.0	60	156.0
D	329	329	D1	GSP-H	0.6	0.0	2.4	100	60.0	115	69.0
			D2	GS1-N	0.7	0.0	2.4	50	35.0	55	38.5
			D3	GSP-H	0.5	0.0	2.4	100	50.0	115	57.5
			D4	GSP-H	0.6	0.0	2.4	100	60.0	115	69.0
			D5	GSP-H	0.6	0.0	2.4	100	60.0	115	69.0
			D6	GS1-N	0.8	0.0	2.4	50	40.0	55	44.0
			D7	GS1-N	0.8	0.0	2.4	50	40.0	55	44.0
			D8	GS1-N	0.5	0.0	2.4	50	25.0	55	27.5
			D9	GS1-N	1.1	0.0	2.4	50	55.0	55	60.5
							Totals Achieved	W	1,390.0	E	1,400.5
							Totals Required	W	718.0	E	1,355.0

ACROSS

Bracing Line			Bracing Elements Provided					Wind		Earthquake	
Line Label	Min BUs W	Min BUs E	Brace No.	Brace Type	Brace Length	Brace Angle	Brace Height	Rating BUs/m	BUs Achieved	Rating BUs/m	BUs Achieved
M	100	100	M1	GS1-N	1.3	0.0	2.4	70	91.0	60	78.0
			M2	GS1-N	1.3	0.0	2.4	70	91.0	60	78.0
N	119	119	N1	BLP-H	0.5	0.0	2.4	135	67.5	135	67.5
			N2	BLP-H	0.5	0.0	2.4	135	67.5	135	67.5
O	100	100	O1	GS1-N	1.8	0.0	2.4	70	126.0	60	108.0
P	100	100	P1	GS1-N	2.4	0.0	2.4	70	168.0	60	144.0
			P2	GS1-N	2.4	0.0	2.4	70	168.0	60	144.0
Q	100	100	Q1	GS1-N	2.4	0.0	2.4	70	168.0	60	144.0
			Q2	GS1-N	1.8	0.0	2.4	70	126.0	60	108.0
R	100	100	R1	GS1-N	1.8	0.0	2.4	70	126.0	60	108.0
			R2	GS1-N	1.8	0.0	2.4	70	126.0	60	108.0
S	141	141	S1	GS1-N	2.4	0.0	2.4	70	168.0	60	144.0
			S2	GS1-N	2.6	0.0	2.4	70	182.0	60	156.0
							Totals Achieved	W	1,675.0	E	1,455.0
							Totals Required	W	1,345.0	E	1,355.0

RECEIVED
20 JUL 2018

BISHOP ARCHITECTURE
P O Box 906, ROTORUA
1109 Pukuatua Street, ROTORUA
(ph)07 929 9607
jobs@bishoparch.co.nz

COUNCIL COPY

EC
77977

CONSENT

Client: Mark Lam

Site Address: 16 Oakland Place, Ngongotaha, Rotorua,

LEGAL DESCRIPTION
Lot No. 70 389915

Job Title: Gourlay Home - Mark Lam

Drawing Title: Bracing Calcs

Scale 1:100	Drawing Number 23
Drawn JWD	
Checked MB	
Published 19-Jul-18	Job No. GH84

ALL DIMENSIONS TO BE VERIFIED ON SITE

Document Set ID: 3556054
Version: 2, Version Date: 25/02/2020

BUILDABLE CONSENT LAYOUT

For valley/saddle truss fixing unless stated otherwise use a pair of wire dogs at 900mm centres for up to and including a very high wind zone. Or a pair of CT200's at 900mm centres for extra high wind zone. This fixing is to meet the minimum requirements as per NZS3604.

CARTERS

Your Building Partner

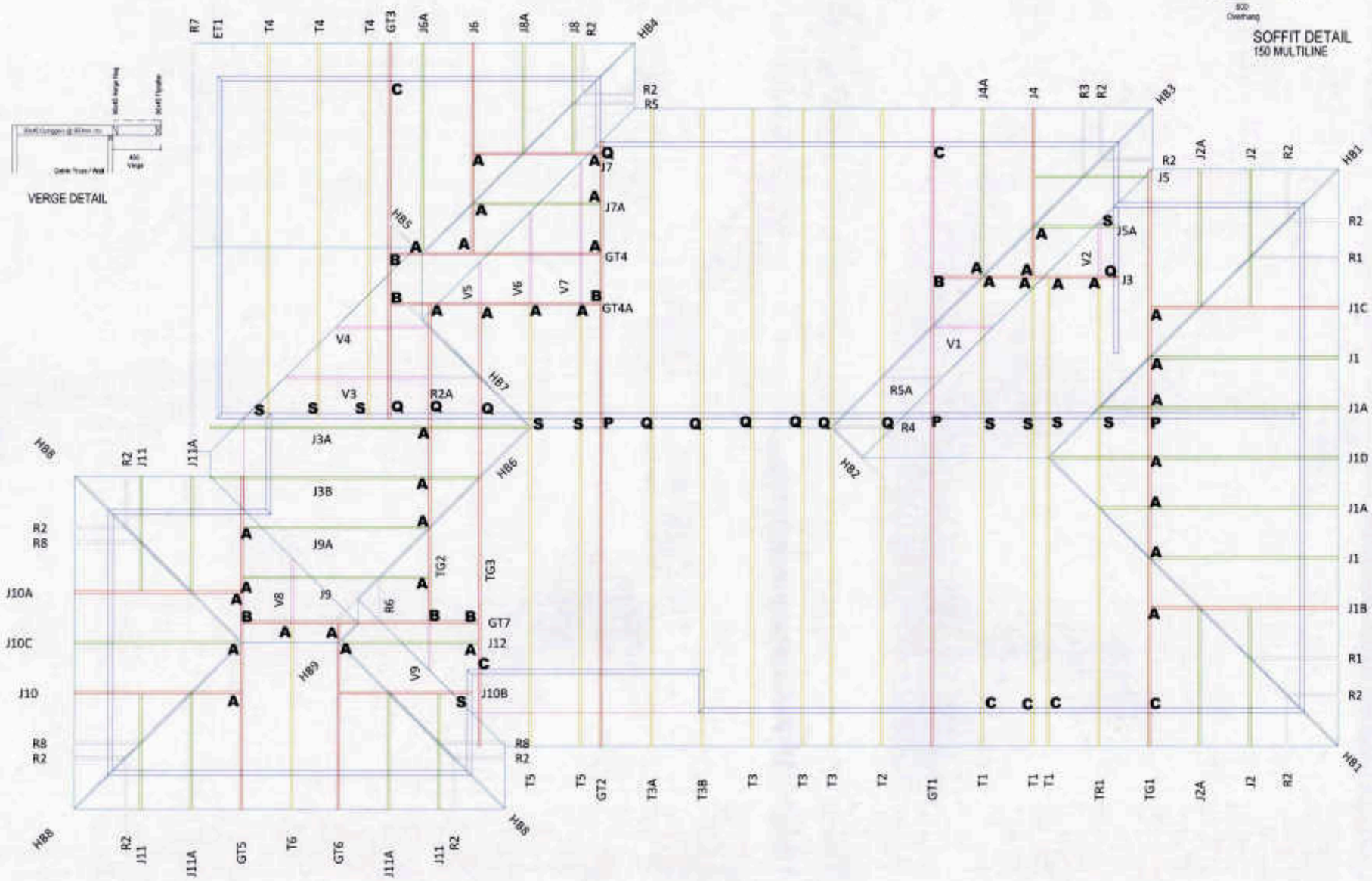

CARTERS
Carters Manufacturing Cambridge
(07) 3431049

JOB No **267122C1**

Client: GOURLAY HOMES LIMITED
Job: MARK LAM
Site: 16 OAKLAND PLACE
NGONGHATAHA
ROTORUA

Pitch: 25.0deg
Roof Type: Metal Tiles
Overhang: 600mm
Wind Area: High
Roof Snow: 0.000kPa

Trusses and rafters at 900 mm max centres unless stated otherwise. This layout is to be read in conjunction with the Architectural plans.

DRAWN David Shaw | 18 Apr,2018

FIXINGS

A = 47x90 Joist Hanger
B = 47x120 Joist Hanger
C = CT200 (pair)
D = 47x190 Joist Hanger
E = 95x165 Joist Hanger
F = SH-140 Split Hanger
G = SH-180 Split Hanger
H = SH-220 Split Hanger
J = 2x6kN Strap (12kN Total)
K = 6kN Strap
L = Multigrip (single)
M = Multigrips (pair)
N = Nailon Plate (200x100)
P = 16kN Pack
Q = 9kN Pack
S = CPC 40 Single Cleat
T = CPC 40 Short (pair)
U = CPC 80 Single Cleat
V = 16kN Uplift
W= 24kN Uplift
X = 25kN Uplift
Y = 35kN Uplift
Z = 45kN Uplift

ONLY
77977

Unless otherwise indicated, all specified truss fixings are to use L/Lok product nail fasteners (as per the MiTek On-site Guide) when the choice of using screws or nails is optional.

All truss to frame fixings require 2 additional 2/90x3.15dia skew nails.

All truss fixings not indicated as above must have 2 wire dogs for cross joints and 2/90x3.15dia nails for butt joins.

Fixings shown are for fixing trusses to the top plate. Any other point load uplift fixings down through the framing stud to top plate, stud to bottom plate, bottom plate to floor remain the responsibility of the architect / draughtsman.

FTMA NEW ZEALAND

If metal ceiling battens on clips are used, 90x45 SG8 bottom chord restraints are required at 1800mm centres fixed with 2/90x3.15dia nails (skew nails if on edge).
All gable trusses are designed to suit cladding manufacturer's framing requirements.
If a gable truss requires a windbeam brace, the type of MiTek brace will be noted as such on the layout.

BUILDABLE CONSENT LAYOUT

CARTERS

Your Building Partner

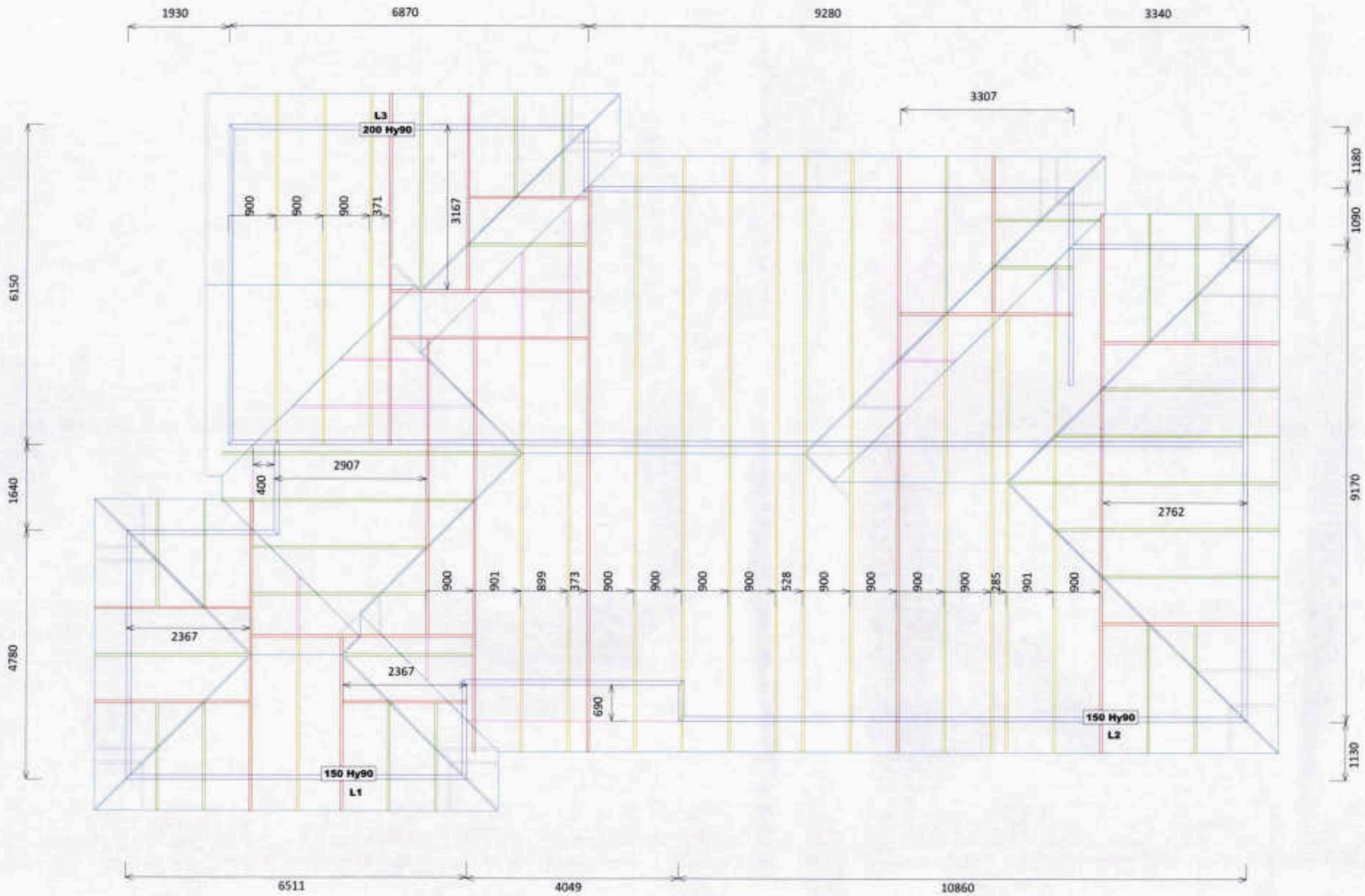

CARTERS
Carters Manufacturing Cambridge
(07) 3431049

JOB No **267122C1**

Client: GOURLAY HOMES LIMITED
Job: MARK LAM
Site: 16 OAKLAND PLACE
NGONGHATAHA
ROTORUA

Pitch: 25.0deg
Roof Type: Metal Tiles
Overhang: 600mm
Wind Area: High
Roof Snow: 0.000kPa

PC ONLY
77977

Trusses and rafters at 900 mm max centres unless stated otherwise. This layout is to be read in conjunction with the Architectural plans.

DRAWN David Shaw | 18 Apr,2018

Dn kN | Up kN — Ultimate Limit State Loads

Notification of point loaded lintels or point loads on internal walls where the downward load is higher than 8kN (85mm raft type slab) or 10kN (100mm standard slab), or the upward load is greater than 10kN.

Any roof loads as stated on this layout over 16kN up or down are outside the scope of NZS3604, and the architect / draughtsperson is responsible for the design to transfer the loads to the ground.

The lintels have been sized using one of the following:

hy90, hyONE and hySPAN lintels have been sized using the designIT for houses - New Zealand series 6 software.

GANGLAM and FLITCH BEAMS have been sized using the MiTek Beam Program V1.10 June 2011.

Any treated LVL product is H1.2, which satisfies the minimum treatment requirement of NZS3602.

Unless otherwise stated the timber grade for all lintels is SG8. Lintels not shown are to be selected as per NZS3604: 2011.

FTMA NEW ZEALAND

All internal walls shown hatched on this layout are considered to be loadbearing
Lintel fixing specification remains the responsibility of the architect / draughtsperson

Document Set ID: 3556054
Version: 2, Version Date: 25/02/2020

GENERAL

1. Do not scale from drawings. These drawings are to be read in conjunction with the architectural drawings and all other related documents. Refer to architectural drawings for dimensions, rebates & recesses.

2. Contact the architect/engineer if any discrepancies are found.

3. Under no circumstances shall polystyrene spacers be used. Use recommended spacers as per details provided.

4. DPM shall be in accordance with NZS3604 (polyethylene sheet, min. 0.25mm). All penetrations through the DPM shall be sealed.

5. A layer of sand blinding or granular fines (GAP7) shall be placed, screeded and compacted over the building platform. The maximum thickness of this layer shall be no more than 50mm.

6. All service trenches shall be properly backfilled and compacted.

7. Where underfloor heating is installed, floor topping shall be increased to 110mm.

8. Concrete polishing/grinding has not been allowed for in this design. Please advise Wilton Joubert Ltd if it is intended for the floor to be polished/grinded.

9. Polystyrene pods shall be 1100 x 1100 x 220mm.

CONCRETE

1. All concrete work and materials shall conform to NZS3109 and applicable building consent authority regulations.

2. No cuts shall be made to the floor other than those shown on the drawings.

3. Unless otherwise noted, concrete shall be:

20MPa minimum with Firth RP2019TC2 fibre mix (or 25MPa minimum with Firth RP2519TC2 fibre mix if in exposure zone D)

REINFORCEMENT

1. Unless otherwise specified, all reinforcement shall be Ductility Class E, in accordance with NZS 4671.

2. All bend diameters shall comply with NZS 3109. Re-bending of reinforcement is not permitted. 'Spot' welding of reinforcement is not permitted.

3. All mesh reinforcement shall be Ductility Class E as per NZS4671

4. Unless otherwise specified by proprietary product specifications, mesh shall be lapped a minimum of 250mm or by a grid plus 50mm, whichever is greater.

5. Unless otherwise specified on plans, minimum covers are:
   exposed to earth: 75mm
   exposed to edge: 50mm
   protected by damp proofing: 50mm

6. Unless otherwise specified, reinforcement laps are:

Reinforcement Grade	Nomination	min. lap (whichever is greater)	concrete strength (MPa)
300	'D'	40Ø or min. 600mm	all blockfill, 20 and 25
500	'HD'	70Ø	all blockfill
500	'HD'	56Ø	20
500	'HD'	50Ø	25

SITE CONDITIONS

1. Design based on soils report/assessment
By: O'Brien Geotech Ltd
Ref: 583
Dated: May 2017

Specifically: Design based on all unsuitable material removed and uniform soils across building platform with a minimal Ultimate bearing capacity of: 200 kPa, subject to engineers confirmation.

Design based on TC2 requirements as detailed in MBIE Guidance Document December 2012.

INSPECTIONS

1. Check the BUILDING CONSENT CONDITIONS for any inspections that are required by the Building Consent Authority (BCA).

2. If BCA requires PS4 to be issued for inspections, a local engineer may be engaged to carry out such inspections and issue a PS4 accordingly.

NOTES:

BC ONLY
77977

Revision	Description	Date

WILTON JOUBERT
Consulting Engineers
Northland: 09 945 4188
Auckland-Waikato: 09 527 0196
Canterbury: 021 824 063
Southern Lakes: 03 443 6209
www.wiltonjoubert.co.nz

Job Title
Proposed Residence
Lot 70 DP 389915
16 Oaklands Place
Ngongotaha, Bay of Plenty

Sheet Title
General Notes

AAF	MH
NL	...
	21-9-2018
Job # 76541	S0

Document Set ID: 3556054
Version: 2, Version Date: 25/02/2020

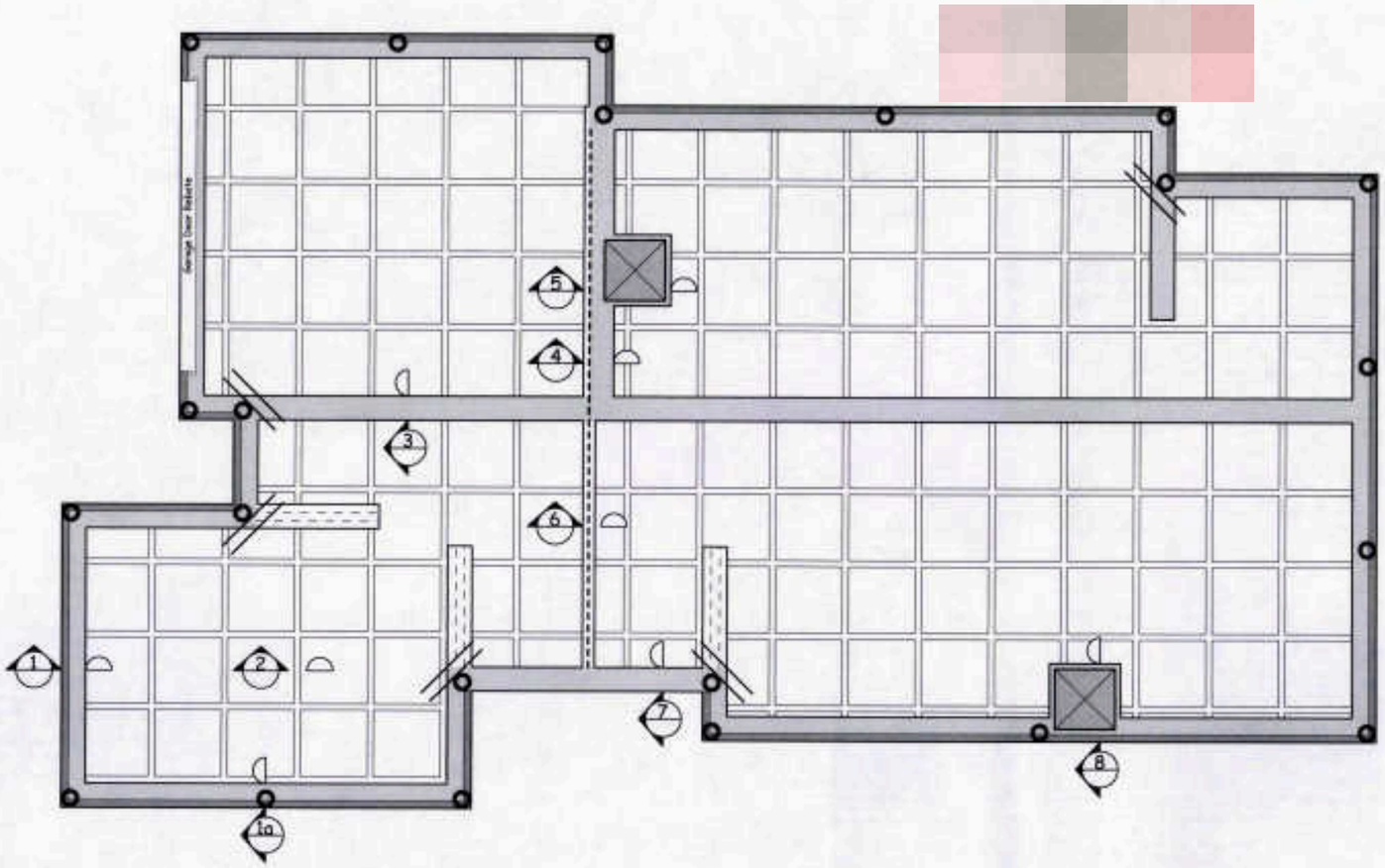

Ribraft Floor Plan

Scale 1:100

Legend:

Re Entrant corner steel
2MD12 x 1200mm
at 200 crs

6mm sawcut
25mm deep do not
cut into edge beam

400W x 305D
edge beam extension
extending into slab as shown
(2.0m minimum)
with lap min 55XØ

Shower setdown
solid pour under shower
D10 @ 300c/c both ways
cranked 600mm into topping.
HD12 trim around top.
Steel in nibs, thickenings and
edge beams continuous through

300Ø Shear Key Pile
2MD12 vertical
set 1.1m below CGL

Quantities of Spacers

(Quantities are approximate
and to be verified on a quote only)

Item	Qty.
WJ100 Centre Spacer	230
WJ101 Clip on Spacer	115

NOTES:

Do not scale from Drawings. Refer Architectural Drawings for overall dimensions. To be read in conjunction with all other related documents.

BC ONLY
77977

Issue	Description	Date

WILTON JOUBERT
Consulting Engineers
Northland: 09 945 4188
Auckland-Waikato: 09 527 0196
Canterbury: 021 824 063
Southern Lakes: 03 443 6209
www.wiltonjoubert.co.nz

Job Title
Proposed Residence
Lot 70 DP 389915
16 Oaklands Place
Ngongotaha, Bay of Plenty

Sheet Title
Ribraft Floor Plan

AAF	MH
NL	
1:100	21-9-2018
Job # 76541	S1

Document Set ID: 3556054
Version: 2, Version Date: 25/02/2020

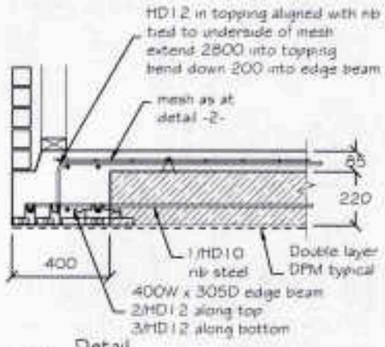

1 Detail

Raftfloor Edge Beam - 400
Scale 1:25

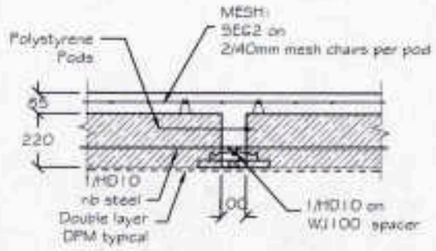

2 Detail

Raftfloor Internal Rib - 100
Scale 1:25

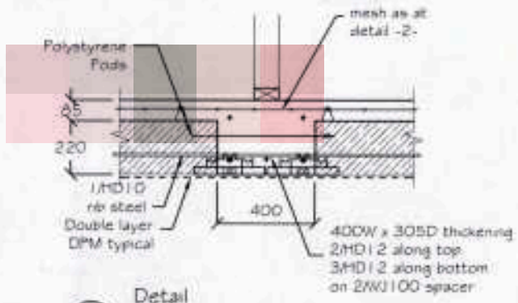

3 Detail

Raftfloor Internal Rib - 400
Scale 1:25

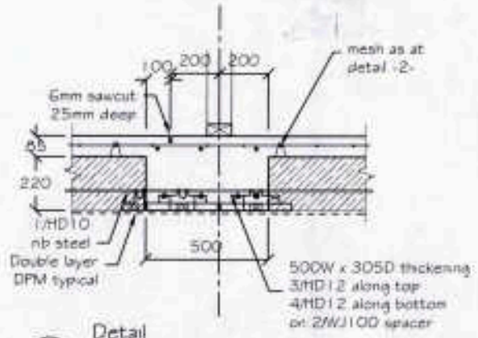

4 Detail

Raftfloor Internal Rib -500
with Sawcut
Scale 1:25

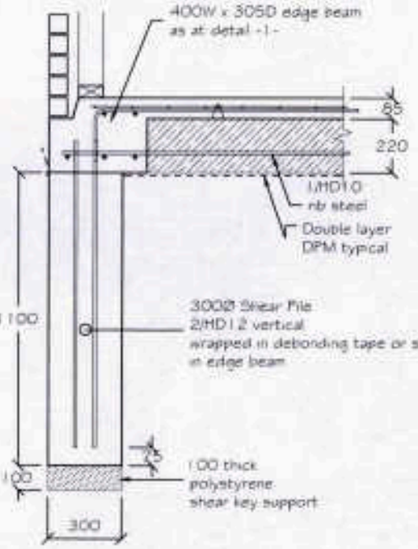

1a Detail

Raftfloor Edge Beam - 400
Scale 1:25

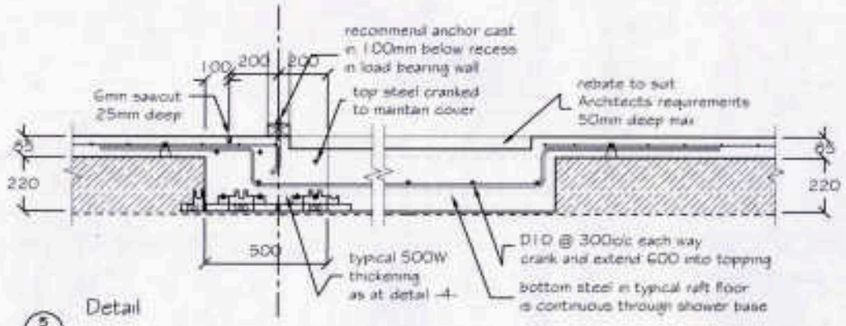

5 Detail

Raftfloor Solid Pour
Shower Setdown
Scale 1:25

NOTE:

Allow for Ribs and or
Thickenings as may be shown on plan

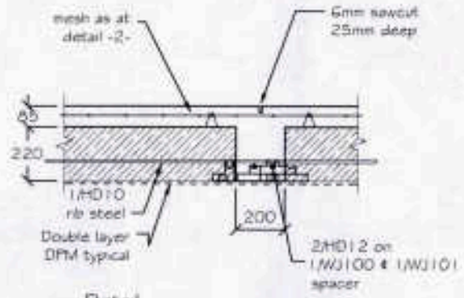

6 Detail

Raftfloor Internal Rib -200
with Sawcut
Scale 1:25

Double DPM Layer: DPM to generally comply with Clauses 7.5.4 to 7.5.7 of NZS3604:2011.
Two layers of 0.25mm polythene to be used. Laps for each layer to be staggered. Laps to be taped.

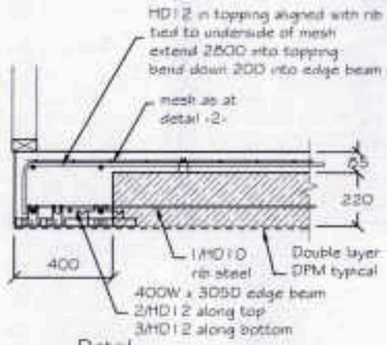

7 Detail

Raftfloor Edge Beam - 400
Scale 1:25

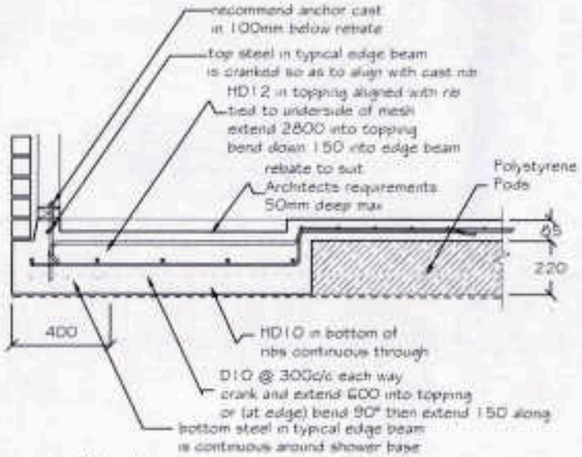

8 Detail

Raftfloor Edge Beam - 400
Scale 1:25

NOTES:
Do not scale from Drawings.
Refer Architectural Drawings for overall dimensions. To be read in conjunction with all other related documents.

BC ONLY
77977

Issued	Description	Date

WILTON JOUBERT
Consulting Engineers
Northland: 09 945 4188
Auckland-Waikato: 09 527 0196
Canterbury: 021 824 063
Southern Lakes: 03 443 6209
www.wiltonjoubert.co.nz

Job Title
Proposed Residence
Lot 70 DP 389915
16 Oaklands Place
Naporotaha, Bay of Plenty

Sheet Title
Ribraft Floor
Details

AAF	MH
NL	...
1:25	21-5-2018
Job # 76541	S2

Document Set ID: 3556054
Version: 2, Version Date: 25/02/2020

BC ONLY
77977

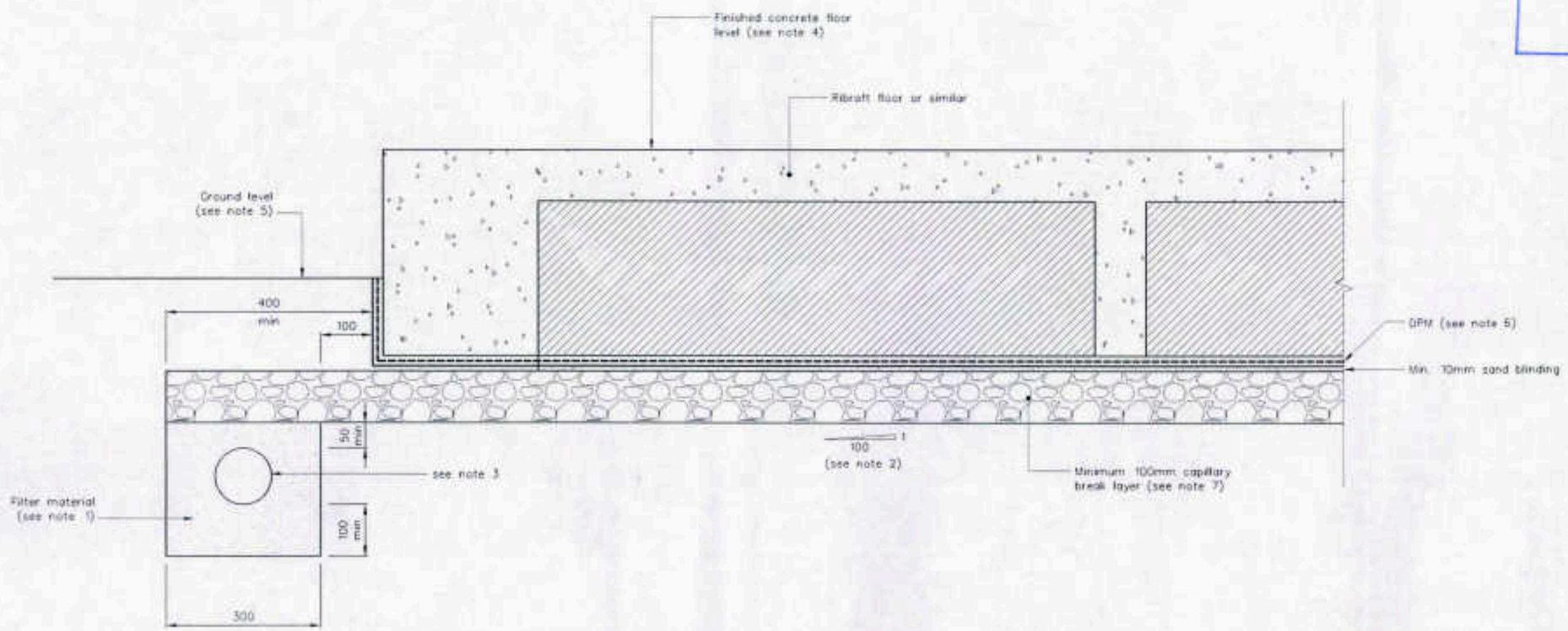

TYPICAL DETAIL: INDICATIVE FOUNDATION DESIGN

NOTES:

1. Drain filter material grading as indicated in Table 1.
2. Base of capillary-break layer to have a minimum fall of 1:100 towards drain from centre of foundation.
3. Capillary-break drain to extend around perimeter of building with a positive connection to stormwater system.
4. Finished concrete floor level shall be a minimum of 150mm above adjacent ground level or the minimum height given in Clause 7.5.2.1 of NZS3604: 1999 (whichever is greater), dependant upon whether the ground is protected by permanent paving or not and the type of exterior wall covering. Due allowance to be made for anticipated post-construction settlements to ensure compliance with minimum dimensions required by NZS3604, in the long term.
5. A minimum fall of 1:25 to be provided for ground surface adjoining foundation for minimum 1m from the building or permanent paving with minimum 1:150 fall to 100mm wide concrete channel, in accordance with Clause 7.5.2.2 of NZS3604: 1999. Allowance to be made for possible future settlement close to building.
6. DPM to generally comply with Clauses 7.5.4 to 7.5.7 of NZS3604: 1999. Two layers of 0.25mm polythene to be used. Laps for each layer to be staggered. Laps to be taped.
7. Capillary-break material shall be well graded compacted hardfill with not more than 5% passing the 2.2mm sieve and 100% passing the 19mm sieve.
8. Foundation raft details are indicative only and shall be subject to specific engineering design.

TABLE 1

Test Sieve Aperture (mm)	Percentage passing (%)
26.5	100
13.2	85–100
9.5	80–95
4.75	65–85
2.36	50–70
1.18	35–55
0.6	18–40
0.3	3–25
0.15	8 max
0.075	0

SCALE 1: 100
0 1 2 3 4 5 (m)

Tonkin & Taylor
Environmental & Engineering Consultants
Tauranga
Hamilton Auckland Christchurch
Nelson Wellington Whanganui

DRAWN	SMB	Mar 09
DRAWING CHECKED		
APPROVED		
CADFILE: \\85 1126 Stg3 F 10.dwg		
SCALES (AT A3 SIZE): 1: 100		
PROJECT No. 85 1126		

PIONEER PROPERTY TRUST
WESTERN ROAD, NGONGOTAHA
STAGE THREE GEOTECHNICAL COMPLETION REPORT
Indicative Foundation Design

FIG. No. Figure 10 REV. 1

P:\851126\WorkingMaterial\CAD\Stage 3 Completion Report Figures\851126Stg3F10.dwg, Fig 10, 13/03/2009 2:26:44 p.m., smbj, 1:1

Document Set ID: 3556054
Version: 2, Version Date: 25/02/2020

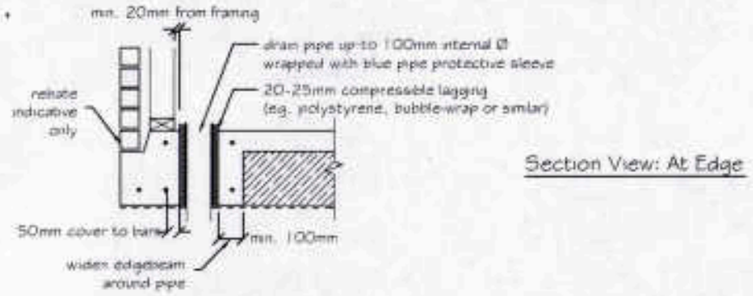

Section View: At Edge

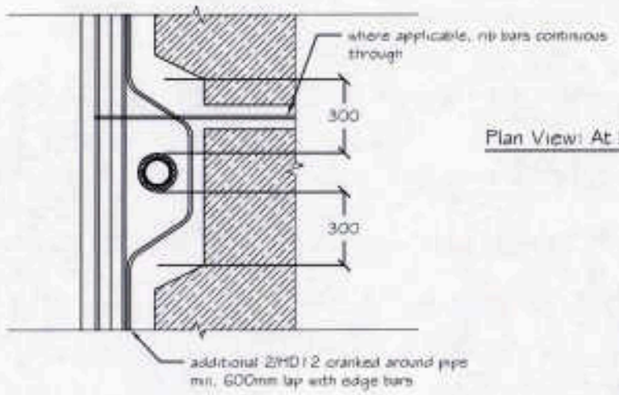

Plan View: At Edge

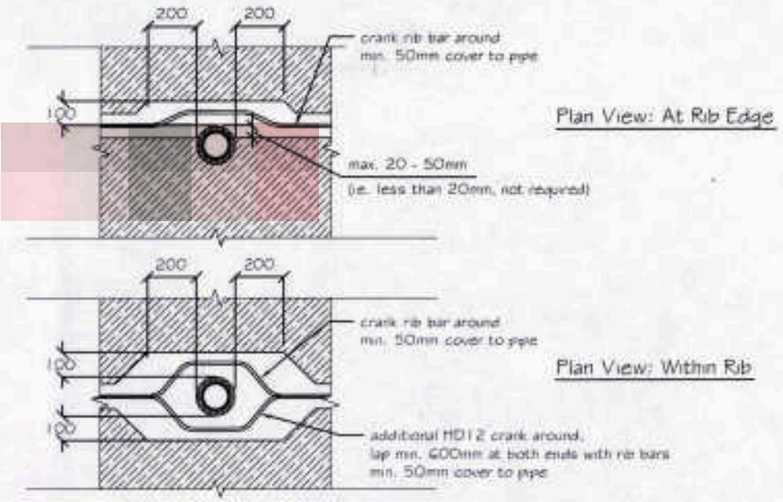

Plan View: At Rib Edge

Plan View: Within Rib

Typical Detail Around Pipes

Raftfloor Internal Ribs

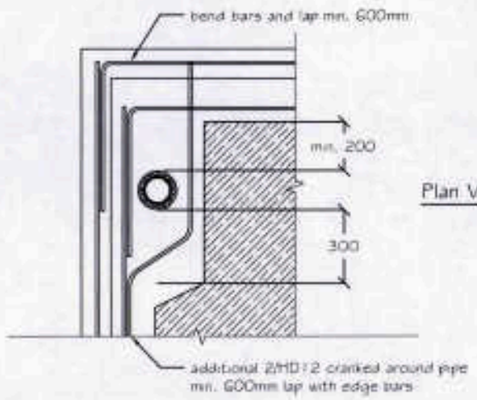

Plan View: At Open Corner

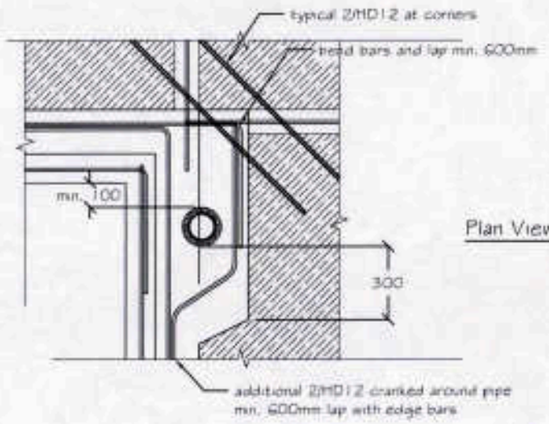

Plan View: At Closed Corner

Typical Detail Around Pipes

Raftfloor Edge Beam

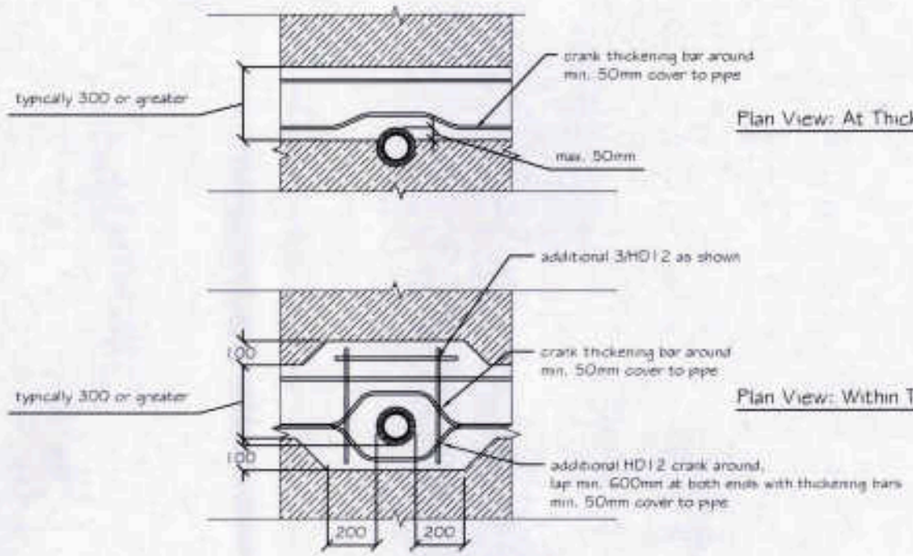

Plan View: At Thickening Edge

Plan View: Within Thickening

Typical Detail Around Pipes

Raftfloor Internal Thickenings

NOTES:

These details are applicable where plumbing/services are conveyed underground. Services are to be taken through polystyrene pods as much as possible. If this is unavoidable, it may be taken through ribs/thickenings, provided the details (or similar in principle) on this sheet are used.

All service trench backfill shall be properly compacted.

Member sizes and reinforcing shown are indicative only, details shown on raftslab plan & details shall take precedence over the details shown here.

NOTES:

BC ONLY
77977

Revision	Description	Date

WILTON JOUBERT
Consulting Engineers

Northland: 09 945 4188
Auckland-Waikato: 09 527 0196
Canterbury: 021 824 063
Southern Lakes: 03 443 6209
www.wiltonjoubert.co.nz

Job Title:

Sheet Title:
Typical Pipe Details

Drawn: --	Date: DL
Checked: DL	Approved: --
Scale: 1:20	Date: 2019
Sheet No:	D1

Document Set ID: 3556054
Version: 2, Version Date: 25/02/2020

BISHOP ARCHITECTURE
P O Box 908, ROTORUA
1109 Pukuatua Street, ROTORUA
(ph)07 929 9807
jobs@bishoparch.co.nz

BC ONLY
77977

Switches		
	2Way	2 Way Circuit
	3Way	3 Way Circuit
	3	3 Point Switch
		Single Switch

Lights		
	Fluorescent	Fluorescent Light
		Up&Down Light
		Inline fan with light ducted outside
		Ceiling Mounted Light
		Night Light
		Owner supplied Light
		Bathroom Light Ducted outside
		Outside Recessed Light
		Recessed Down Light
		Halogen Light
		Sensor Light

Plugs & Sockets		
	SKY	Sky Connection
		Double Plug
	PH	PH Connection
		Single Plug
	RH	Range Hood Plug
	SW	Special Wiring
	TV	TV Connection

Other		
	WM	Wall Mounted Heater
		Smoke Alarm Hardwired
	S.S	Security Sensor
		Internal heatpump
	L.S	Light Sensor
		Extractor Fan ducted outside
		Garage Door
		Heated Towel Rail
	Distribution	Distribution Board

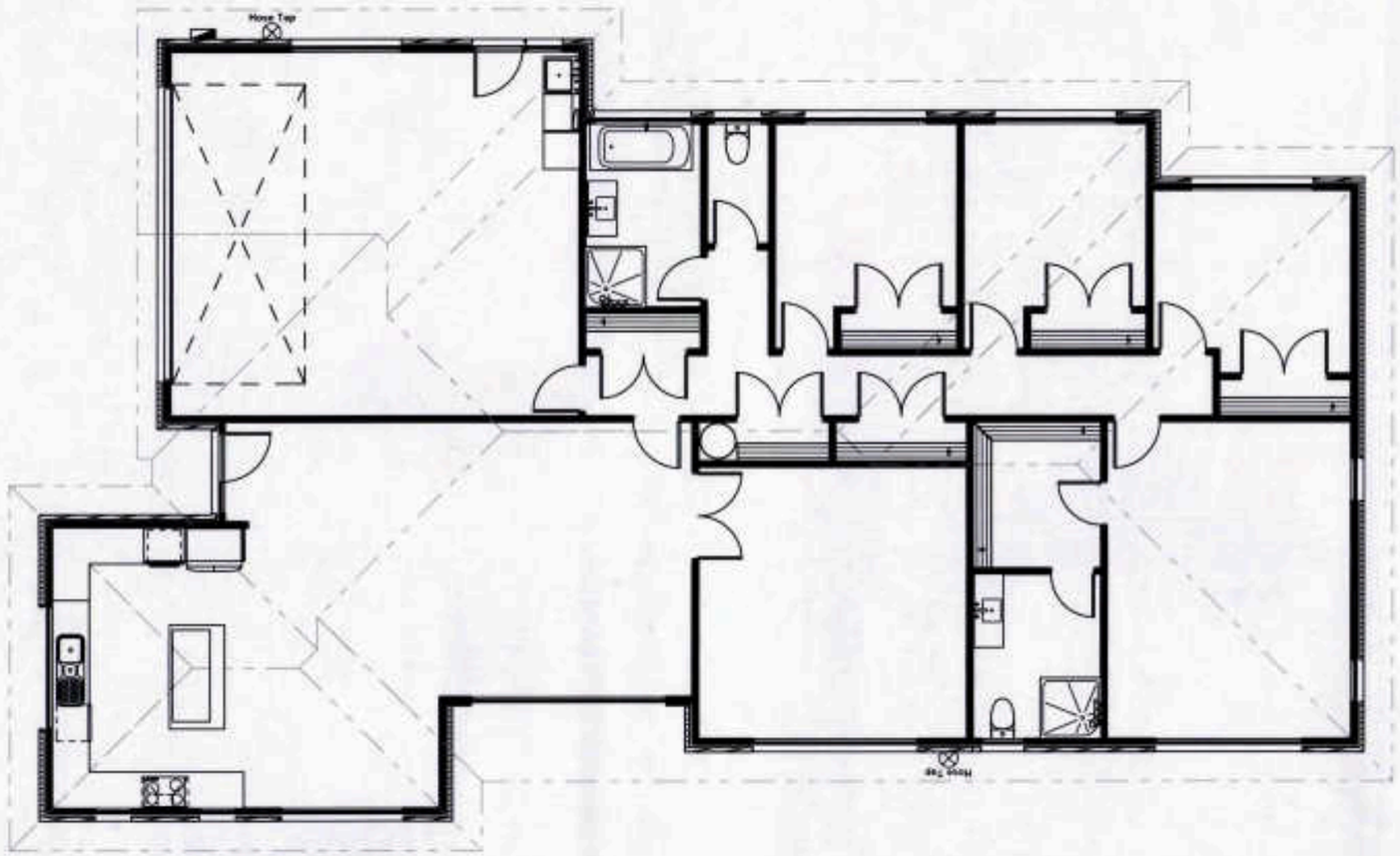

CONSENT

Client:
Mark Lam

Site Address:
16 Oakland Place, Ngongotaha, Rotorua,

LEGAL DESCRIPTION
Lot No. 70 389915

Job Title
Gourlay Home - Mark Lam

Drawing Title
Electrical Plan (Blank)

Scale	Drawing Number
1:100	31
Drawn JWD	
Checked MB	
Published 08-Jun-18	Job No. GH84

ALL DIMENSIONS TO BE VERIFIED ON SITE

Document Set ID: 3556054
Version: 2, Version Date: 25/02/2020